Data Communications

ACOE412

Lecture 4

Multiplexing and Spreading
Circuit Switching and Telephone Network

Spring 2009

0. Overview

In this lecture we will cover the following topics:

6. Multiplexing and Spreading
6.1 Multiplexing
6.2 Spread spectrum
6.3 Summary (part 6)

7. Circuit Switching and Telephone Network
7.1 Circuit-switched networks
7.2 Datagram networks
7.3 Virtual circuit networks
7.4 Structure of a switch
7.5 Telephone network
7.6 Dial-up modem
7.7 Digital subscriber line
7.8 Summary (part 7)

Note

Bandwidth utilization is the wise use of available bandwidth to achieve specific goals.

Efficiency can be achieved by multiplexing; privacy and anti-jamming can be achieved by spreading.

6.1 MULTIPLEXING

Whenever the bandwidth of a medium linking two devices is greater than the bandwidth needs of the devices, the link can be shared. Multiplexing is the set of techniques that allows the simultaneous transmission of multiple signals across a single data link. As data and telecommunications use increases, so does traffic.

Topics discussed in this section:

Frequency Division Multiplexing (FDM)
Wavelength Division Multiplexing (WDM)
Synchronous Time Division Multiplexing (Sync TDM)
Statistical Time Division Multiplexing (Stat TDM)

Dividing a link into channels

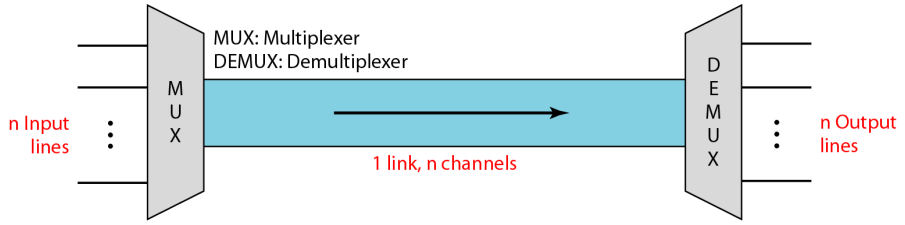

Categories of multiplexing

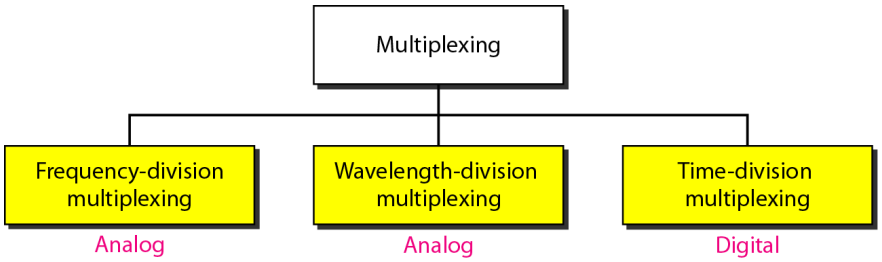

Frequency Division Multiplexing (FDM)

- FDM can be used when the BW of a link is greater than the combined BW of signals to be transmitted.
- Signals generated by each sending device modulate different carrier frequencies, which are then combined into a single composite signal
- **Guard bands** are used to prevent signals from overlapping

Note

FDM is an analog multiplexing technique that combines analog signals.

FDM multiplexing example

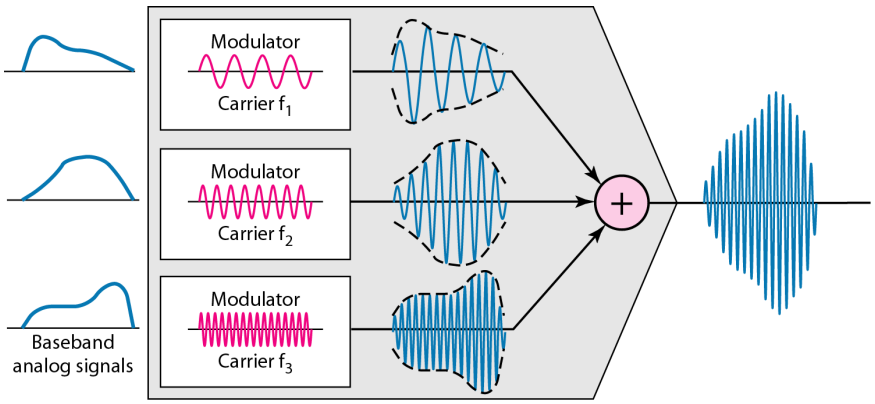

FDM demultiplexing example

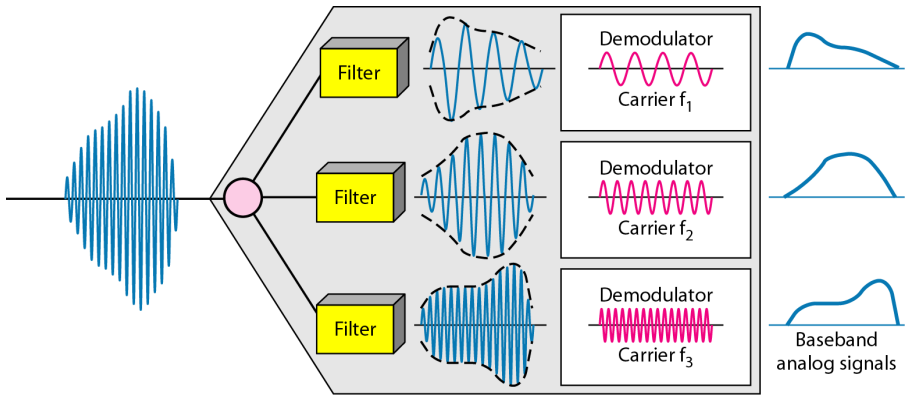

Example

Assume that a voice channel occupies a bandwidth of 4 kHz. We need to combine three voice channels into a link with a bandwidth of 12 kHz, from 20 to 32 kHz. Show the configuration, using the frequency domain. Assume there are no guard bands.

Solution

We shift (modulate) each of the three voice channels to a different bandwidth, as shown in figure in next slide. We use the 20-24 kHz bandwidth for the first channel, the 24-28 kHz bandwidth for the second channel, and the 28-32 kHz bandwidth for the third one. Then we combine them as shown in the figure.

Example

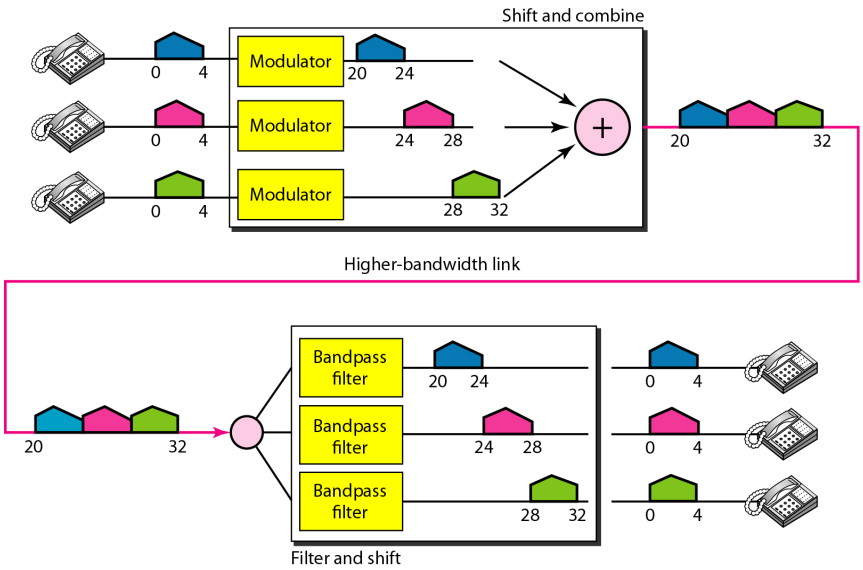

Example

Five channels, each with a 100-kHz bandwidth, are to be multiplexed together. What is the minimum bandwidth of the link if there is a need for a guard band of 10 kHz between the channels to prevent interference?

Solution

For five channels, we need at least four guard bands. This means that the required bandwidth is at least

$$5 \times 100 + 4 \times 10 = 540 \text{ kHz}$$

as shown in the figure below.

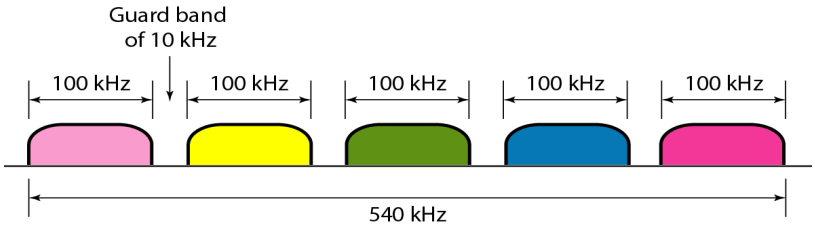

Example

Four data channels (digital), each transmitting at 1 Mbps, use a satellite channel of 1 MHz. Design an appropriate configuration, using FDM.

Solution

The satellite channel is analog. We divide it into four channels, each channel having a 250-kHz bandwidth. Each digital channel of 1 Mbps is modulated such that each 4 bits is modulated to 1 Hz. One solution is 16-QAM modulation. Figure below shows one possible configuration.

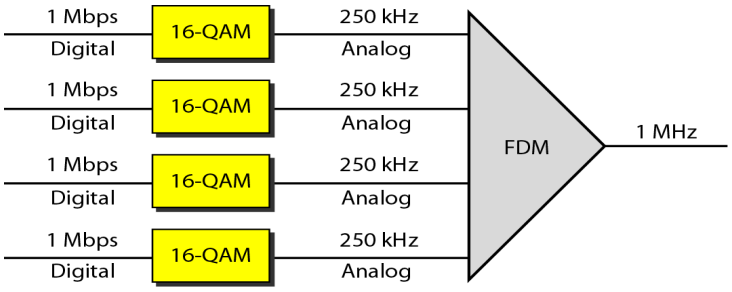

Analog hierarchy

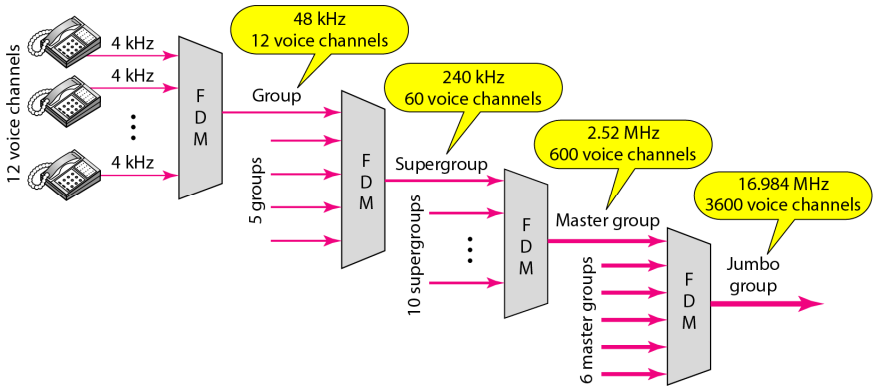

Example

The Advanced Mobile Phone System (AMPS) uses two bands. The first band of 824 to 849 MHz is used for sending, and 869 to 894 MHz is used for receiving. Each user has a bandwidth of 30 kHz in each direction. How many people can use their cellular phones simultaneously?

Solution

Each band is 25 MHz. If we divide 25 MHz by 30 kHz, we get 833.33. In reality, the band is divided into 832 channels. Of these, 42 channels are used for control, which means only 832-42=790 channels are available for cellular phone users.

Wavelength Division Multiplexing (WDM)

- WDM is designed to use the high data rate capability of fiber optic cable.
- Using a fiber-optic cable for one single line wastes the available bandwidth. Multiplexing allows us to connect several lines into one.
- WDM is conceptually the same as FDM, except that the multiplexing and demultiplexing involve optical signals

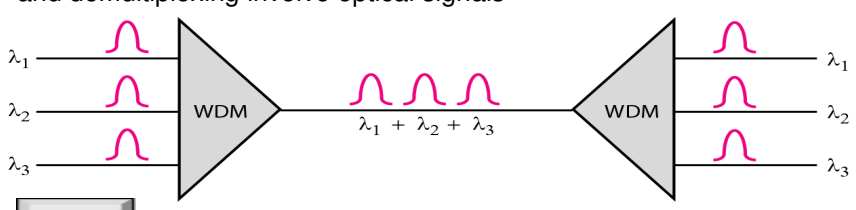

Note

WDM is an analog multiplexing technique to combine optical signals.

Prisms in wavelength-division multiplexing and demultiplexing

- Combining and splitting of light sources are easily handled by a prism
  - A prism bends a beam of light based on the angle of incidence and the frequency
  - Using this technique, a MUX can be made to combine several input beams of light, each containing a narrow band of frequencies, into one beam of wider band of frequencies
  - A DEMUX can be made to reverse the process

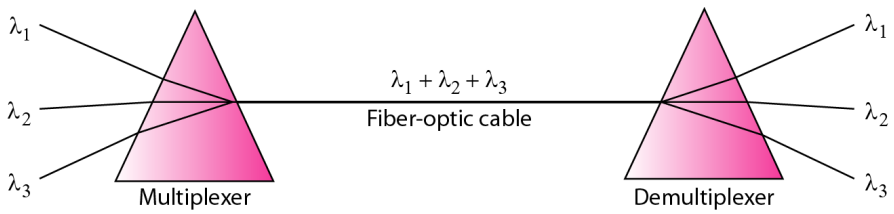

Time Division Multiplexing (TDM)

Note

TDM is a digital multiplexing technique for combining several low-rate channels into one high-rate one.

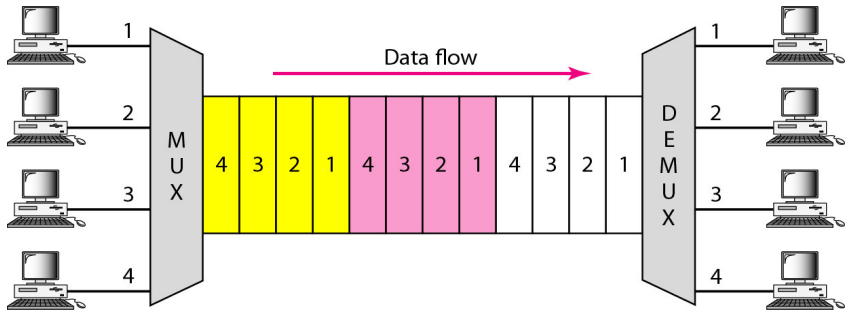

Synchronous Time Division Multiplexing

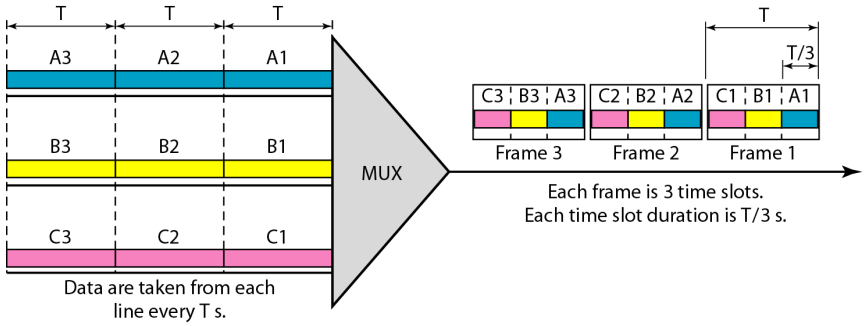

Note

In synchronous TDM, the data rate of the link is *n* times faster, and the unit duration is *n* times shorter.

Example

Figure in next slide shows synchronous TDM with a data stream for each input and one data stream for the output. The unit of data is 1 bit. Find (a) the input bit duration, (b) the output bit duration, (c) the output bit rate, and (d) the output frame rate.

Solution

a. The input bit duration is the inverse of the bit rate: 1/1 Mbps = 1 μs.

b. The output bit duration is one-fourth of the input bit duration, or 0.25 μs.

c. The output bit rate is the inverse of the output bit duration or 1/(4μs) or 4 Mbps. This can also be deduced from the fact that the output rate is 4 times as fast as any input rate; so the output rate = 4 × 1 Mbps = 4 Mbps.

d. The frame rate is always the same as any input rate. So the frame rate is 1,000,000 frames per second. Because we are sending 4 bits in each frame, we can verify the result of the previous question by multiplying the frame rate by the number of bits per frame.

Example

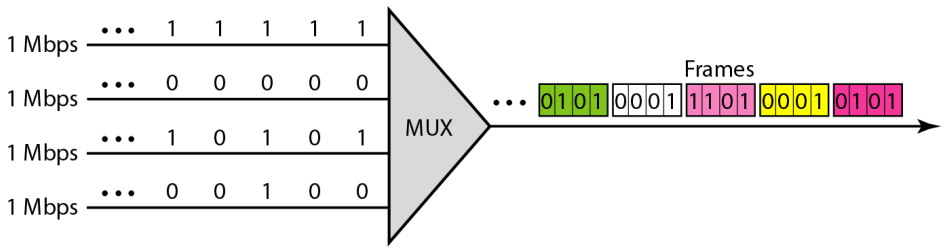

Example

Four 1-kbps connections are multiplexed together. A unit is 1 bit. Find (a) the duration of 1 bit before multiplexing, (b) the transmission rate of the link, (c) the duration of a time slot, and (d) the duration of a frame.

Solution

a. The duration of 1 bit before multiplexing is 1 / 1 kbps, or 0.001 s (1 ms).

b. The rate of the link is 4 times the rate of a connection, or 4 kbps.

c. The duration of each time slot is one-fourth of the duration of each bit before multiplexing, or 1/4 ms or 250 μs. Note that we can also calculate this from the data rate of the link, 4 kbps. The bit duration is the inverse of the data rate, or 1/4 kbps or 250 μs.

d. The duration of a frame is always the same as the duration of a unit before multiplexing, or 1 ms. We can also calculate this in another way. Each frame in this case has four time slots. So the duration of a frame is 4 times 250 μs, or 1 ms.

Interleaving

• TDM can be visualized as two fast rotating switches, one on the MUX side and the other on the DEMUX side. The switches are synchronized and rotate at the same speed but in opposite directions. On the MUX side, as the switch opens in front of a connection, that connection has the opportunity to send a unit onto the path. This process is called **inteleaving**.

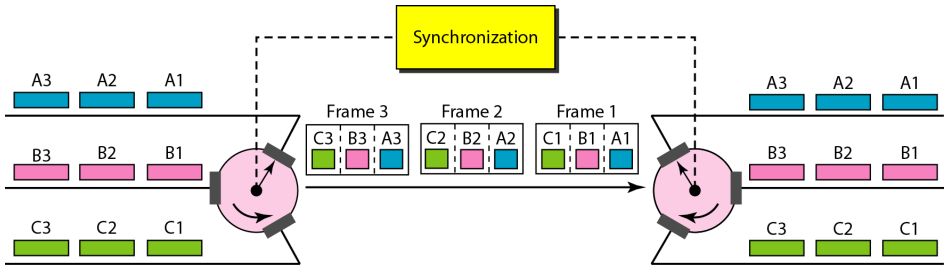

Example

Four channels are multiplexed using TDM. If each channel sends 100 bytes /s and we multiplex 1 byte per channel, show the frame traveling on the link, the size of the frame, the duration of a frame, the frame rate, and the bit rate for the link.

Solution

The multiplexer is shown below. Each frame carries 1 byte from each channel; the size of each frame, therefore, is 4 bytes, or 32 bits. Because each channel is sending 100 bytes/s and a frame carries 1 byte from each channel, the frame rate must be 100 frames per second. The bit rate is 100 × 32, or 3200 bps.

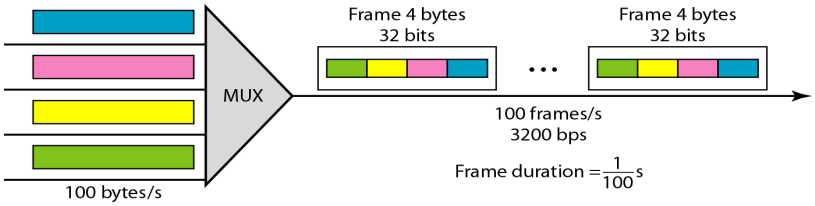

Example

A multiplexer combines four 100-kbps channels using a time slot of 2 bits. Show the output with four arbitrary inputs. What is the frame rate? What is the frame duration? What is the bit rate? What is the bit duration?

Solution

Figure below shows the output for four arbitrary inputs. The link carries 50,000 frames per second. The frame duration is therefore 1/50,000 s or 20 μs. The frame rate is 50,000 frames per second, and each frame carries 8 bits; the bit rate is 50,000 × 8 = 400,000 bits or 400 kbps. The bit duration is 1/400,000 s, or 2.5 μs.

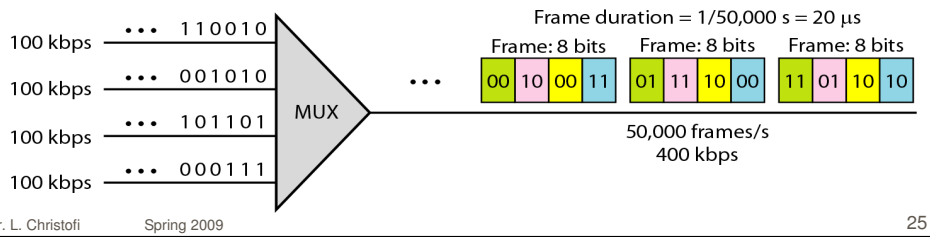

Digital hierarchy

Telephone companies implement TDM through a hierarchy of digital signals, called **Digital Signal** (DS) Service.

The following figure shows the data rates supported by each level:

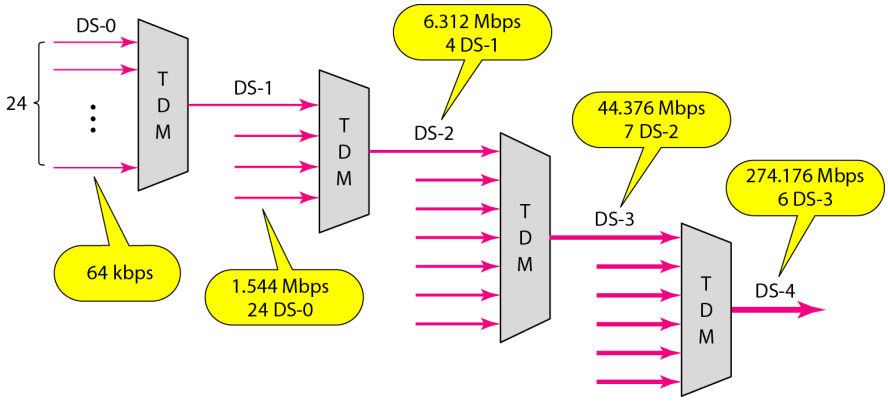

DS and T line rates

Service	*Line*	*Rate (Mbps)*	*Voice Channels*
DS-1	T-1	1.544	24
DS-2	T-2	6.312	96
DS-3	T-3	44.736	672
DS-4	T-4	274.176	4032

T-1 line for multiplexing telephone lines

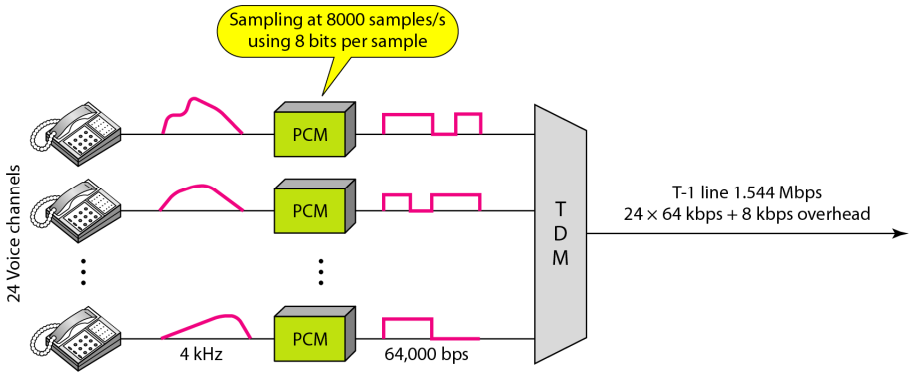

T-1 frame structure

DS-1 requires 8 kbps overhead due to the synchronization bit:

T1 line = 24 slots x 8 bits + 1 bit for synchronization = 193 bits x 8kbps = 1.544Mbps

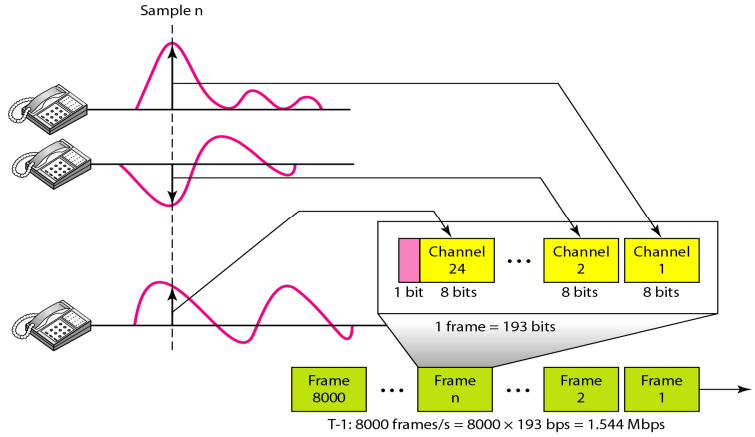

E line rates

Line	*Rate (Mbps)*	*Voice Channels*
E-1	2.048	30
E-2	8.448	120
E-3	34.368	480
E-4	139.264	1920

TDM slot comparison

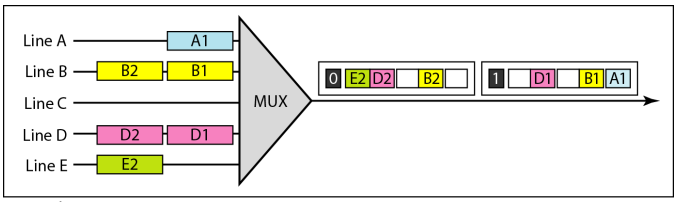

a. Synchronous TDM

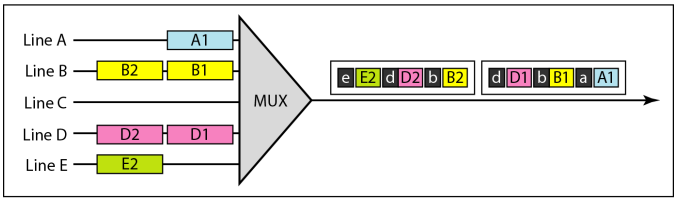

b. Statistical TDM

6.2 SPREAD SPECTRUM

In spread spectrum (SS), we combine signals from different sources to fit into a larger bandwidth, but our goals are to prevent eavesdropping and jamming. To achieve these goals, spread spectrum techniques add redundancy.

Topics discussed in this section:

Frequency Hopping Spread Spectrum (FHSS)
Direct Sequence Spread Spectrum Synchronous (DSSS)

Spread spectrum

• Input is fed into a channel encoder that produces an analog signal with a relatively narrow BW around a center frequency.
• This signal is further modulated using a sequence of digits known as a spreading code or spreading sequence.
• The effect of this modulation is to increase significantly the BW (spread the spectrum) of the signal to be transmitted.
• On the receiving end, the same digit sequence is used to demodulate the spread spectrum signal.

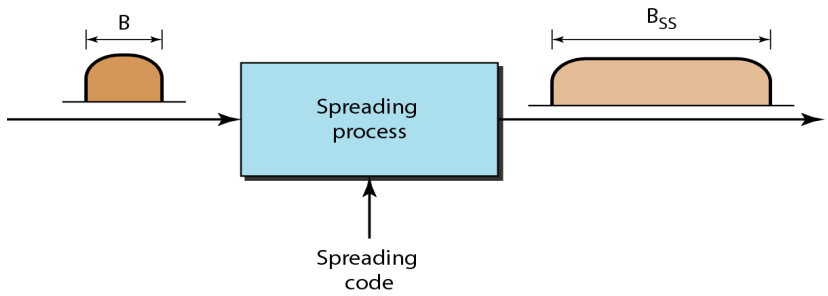

Frequency hopping spread spectrum (FHSS)

With FHSS the signal is broadcast over a random series of radio frequencies, hopping from frequency to frequency at fixed intervals.

A receiver, hopping between frequencies in synchronization with the transmitter picks up the message.

FHSS system

For transmission, binary data are fed into a modulator using FSK or PSK. The resulting signal is entered on a base frequency. A pseudorandom code generator serves as an index into a table of frequencies (spreading code). Each k bits of the spreading sequence specifies one of the 2^k carrier frequencies. At each k-bit interval a new carrier frequency is selected.

This frequency is then modulated to produce a new signal with the same shape but centered on the selected carrier frequency.

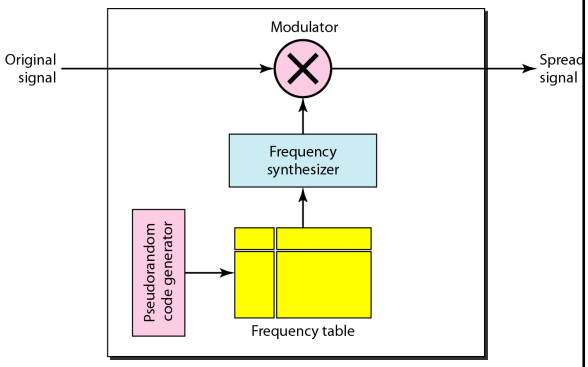

Frequency selection in FHSS

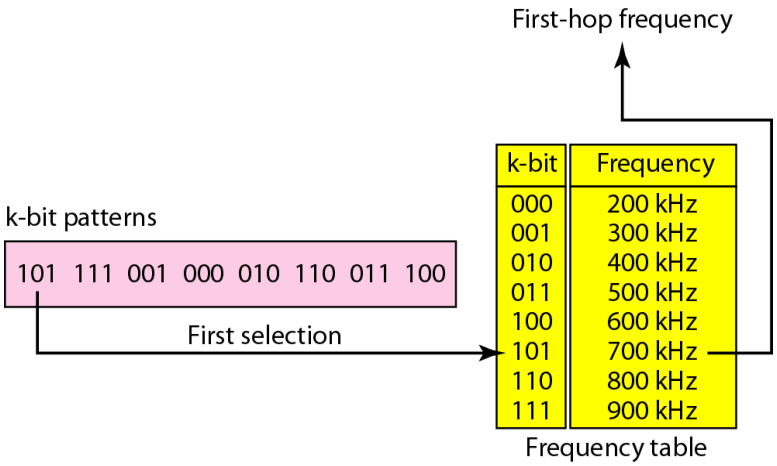

FHSS cycles

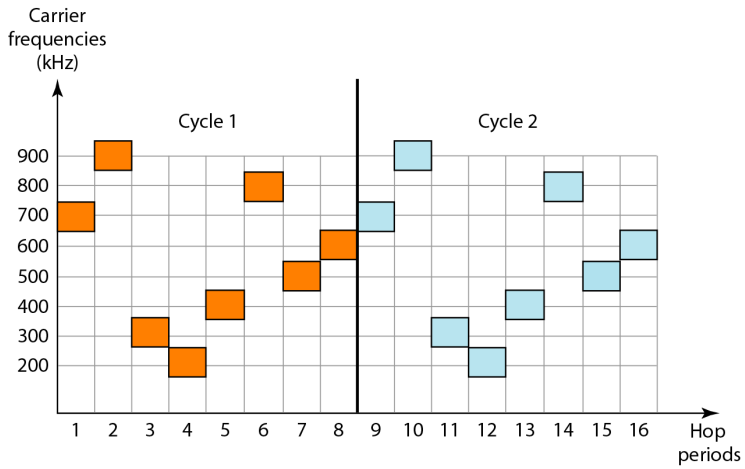

Bandwidth sharing

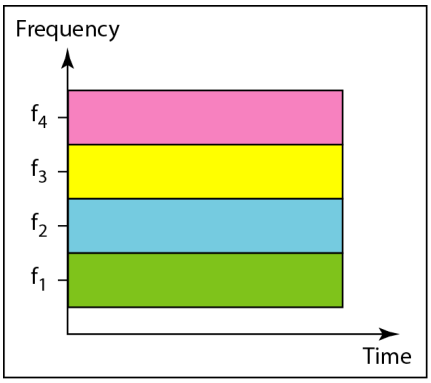

a. FDM

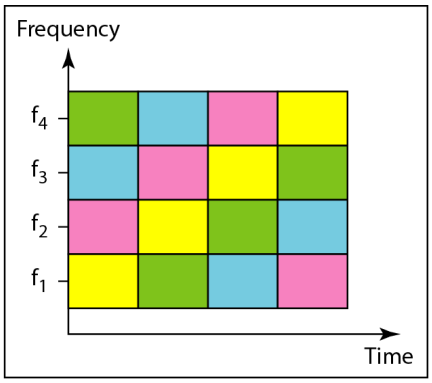

b. FHSS

Direct Sequence Spread Spectrum (DSSS)

With DSSS each bit in the original signal is represented by multiple bits in the transmitted signal using a spreading code.

The spreading code spreads the signal across a wider frequency band in direct proportion to the number of bits used.

eg. a 10-bit spreading spreading code spreads the signal across a frequency band that is 10 times greater than a 1-bit spreading code.

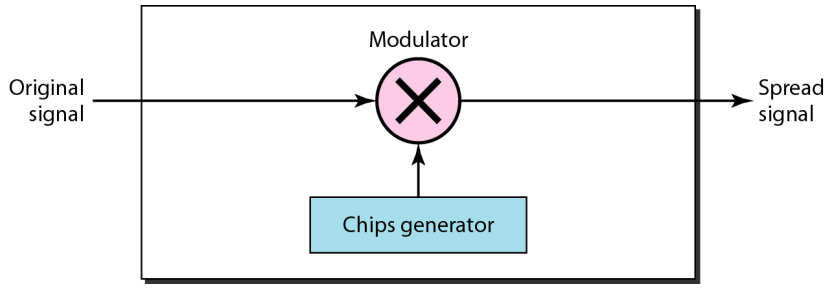

DSSS example

In this example, the information is combined with trhe spreading code using an XOR operation

i.e. 0 + 0 = 0 0 + 1 = 1 1 + 0 = 1 1 + 1 = 0

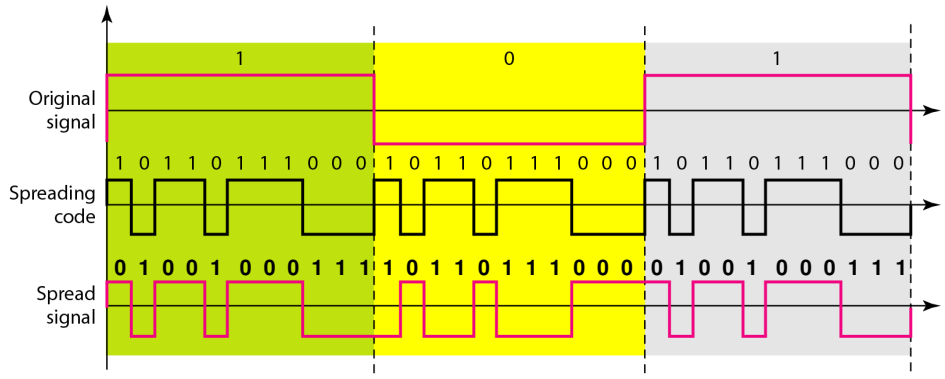

6.3 SUMMARY (part 6)

- Multiplexing is the simultaneous transmission of multiple signals across a single data link.
- Frequency-division multiplexing (FDM) and wave-division multiplexing (WDM) are techniques for analog signals, while time-division multiplexing (TDM) is for digital signals.
- In FDM, each signal modulates a different carrier frequency. The modulated carriers are combined to form a new signal that is then sent across the link.
- In FDM, multiplexers modulate and combine signals while demultiplexers decompose and demodulate.
- In FDM, guard bands keep the modulated signals from overlapping and interfering with one another.
- Telephone companies use FDM to combine voice channels into successively larger groups for more efficient transmission.
- Wave-division multiplexing is similar in concept to FDM. The signals being multiplexed, however, are light waves.
- In TDM, digital signals from n devices are interleaved with one another, forming a frame of data (bits, bytes, or any other data unit).
- Framing bits allow the TDM multiplexer to synchronize properly.
- Digital signal (DS) is a hierarchy of TDM signals.
- T lines (T-1 to T-4) are the implementation of DS services. A T-1 line consists of 24 voice channels.
- T lines are used in North America. The European standard defines a variation called E lines.
- Inverse multiplexing splits a data stream from one high-speed line onto multiple lower-speed lines.

Switched network

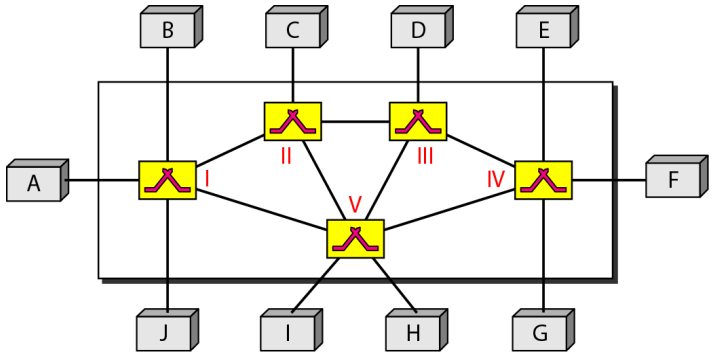

Taxonomy of switched networks

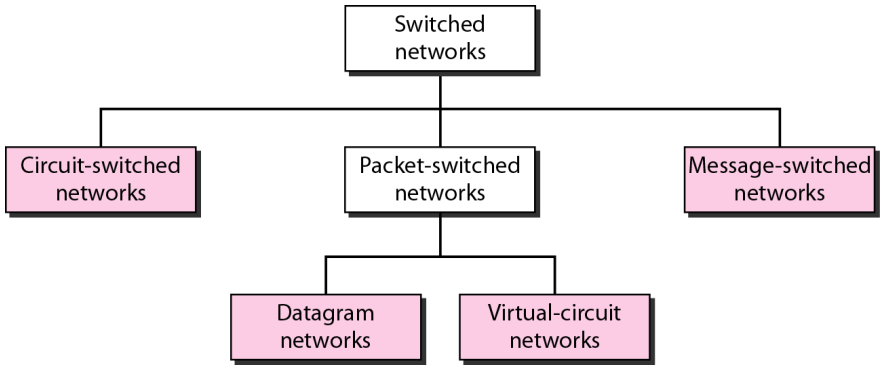

7.1 CIRCUIT-SWITCHED NETWORKS

A circuit-switched network consists of a set of switches connected by physical links. A connection between two stations is a dedicated path made of one or more links. However, each connection uses only one dedicated channel on each link. Each link is normally divided into n channels by using FDM or TDM.

Topics discussed in this section:

Three Phases
Efficiency
Delay
Circuit-Switched Technology in Telephone Networks

Note

A circuit-switched network is made of a set of switches connected by physical links, in which each link is divided into *n* channels.

A simple circuit-switched network

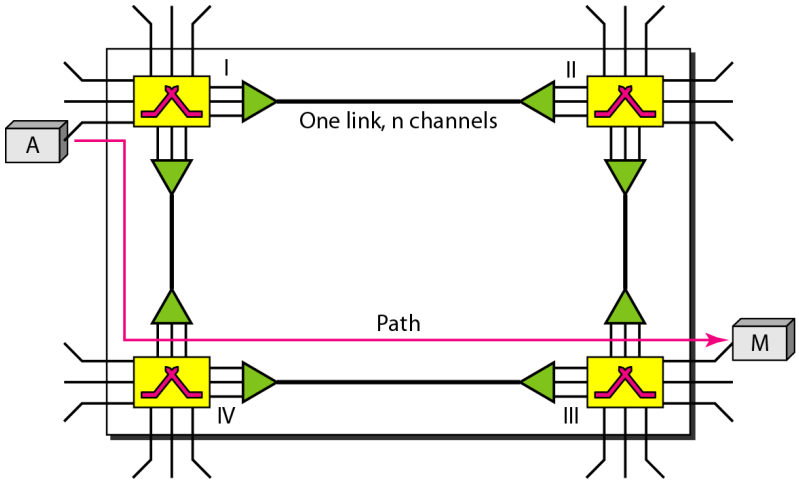

Note

In circuit switching, the resources need to be reserved during the setup phase; the resources remain dedicated for the entire duration of data transfer until the teardown phase.

Example

As an example, let us use a circuit-switched network to connect eight telephones in a small area. Communication is through 4-kHz voice channels. We assume that each link uses FDM to connect a maximum of two voice channels. The bandwidth of each link is then 8 kHz. Figure shows the situation. Telephone 1 is connected to telephone 7; 2 to 5; 3 to 8; and 4 to 6. Of course the situation may change when new connections are made. The switch controls the connections.

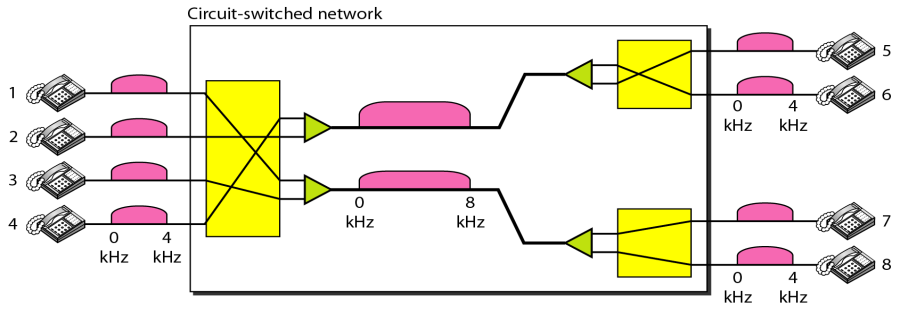

Example

As another example, consider a circuit-switched network that connects computers in two remote offices of a private company. The offices are connected using a T-1 line leased from a communication service provider. There are two 4 × 8 (4 inputs and 8 outputs) switches in this network. For each switch, four output ports are folded into the input ports to allow communication between computers in the same office. Four other output ports allow communication between the two offices. Figure 8.5 shows the situation.

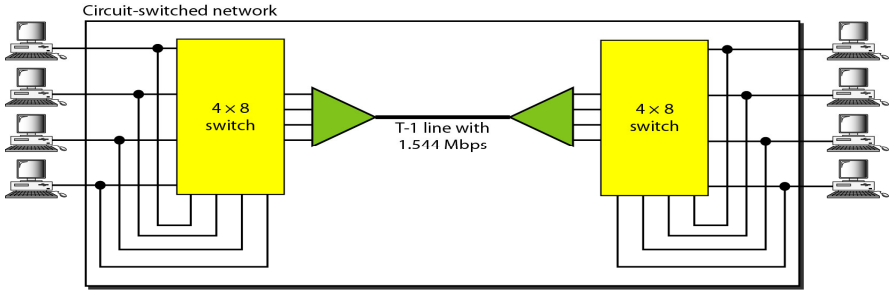

Delay in a circuit-switched network

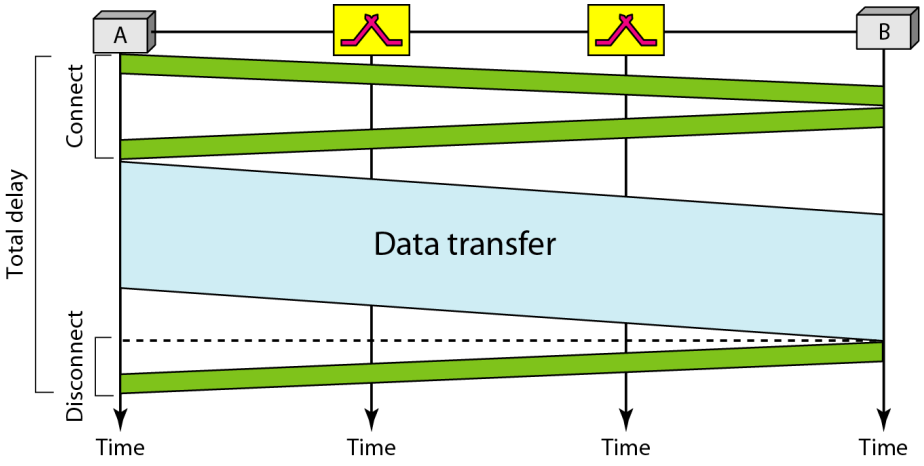

Note

Switching at the physical layer in the traditional telephone network uses the circuit-switching approach.

7.2 DATAGRAM NETWORKS

In data communications, we need to send messages from one end system to another. If the message is going to pass through a packet-switched network, it needs to be divided into packets of fixed or variable size. The size of the packet is determined by the network and the governing protocol.

Topics discussed in this section:

Routing Table
Efficiency
Delay
Datagram Networks in the Internet

Note

In a packet-switched network, there is no resource reservation; resources are allocated on demand.

A datagram network with four routers

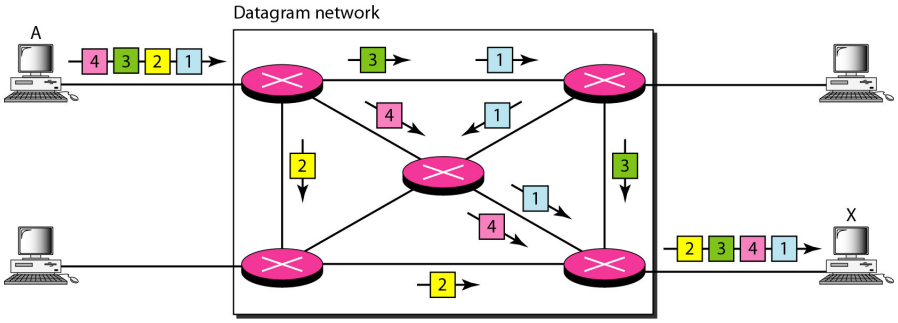

Routing table in a datagram network

Destination address	Output port
1232	1
4150	2
⋮	⋮
9130	3

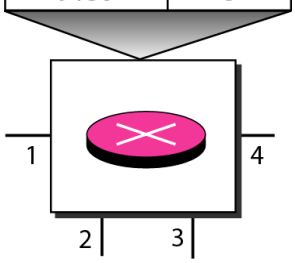

Note

A switch in a datagram network uses a routing table that is based on the destination address.

Note

The destination address in the header of a packet in a datagram network remains the same during the entire journey of the packet.

Delay in a datagram network

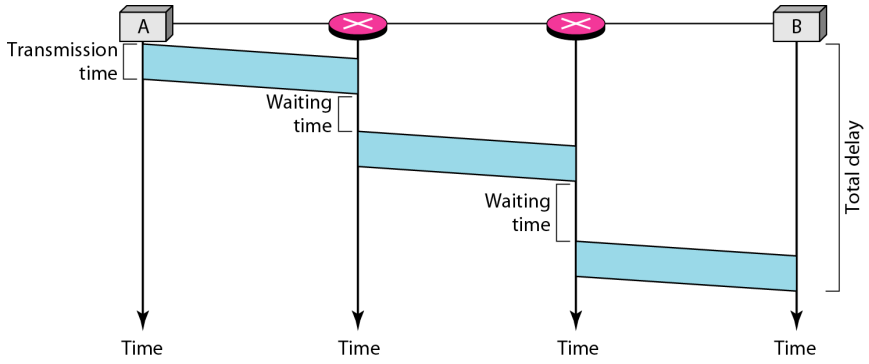

Note

Switching in the Internet is done by using the datagram approach to packet switching at the network layer.

7.3 VIRTUAL-CIRCUIT NETWORKS

A virtual-circuit network is a cross between a circuit-switched network and a datagram network. It has some characteristics of both.

Topics discussed in this section:

Addressing
Three Phases
Efficiency
Delay
Circuit-Switched Technology in WANs

Virtual-circuit network

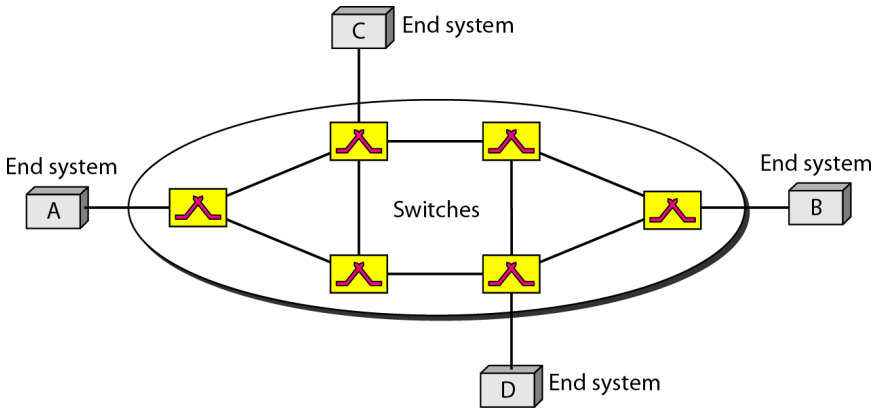

Virtual-circuit identifier

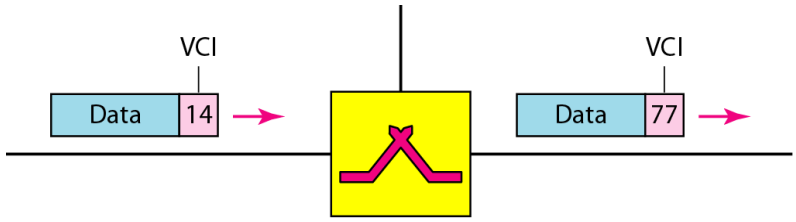

Switch and tables in a virtual-circuit network

Incoming		Outgoing	
Port	VCI	Port	VCI
1	14	3	22
1	77	2	41

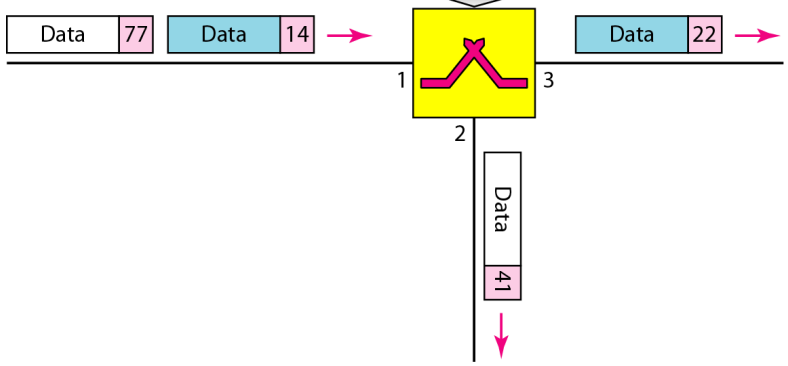

Source-to-destination data transfer in a virtual-circuit network

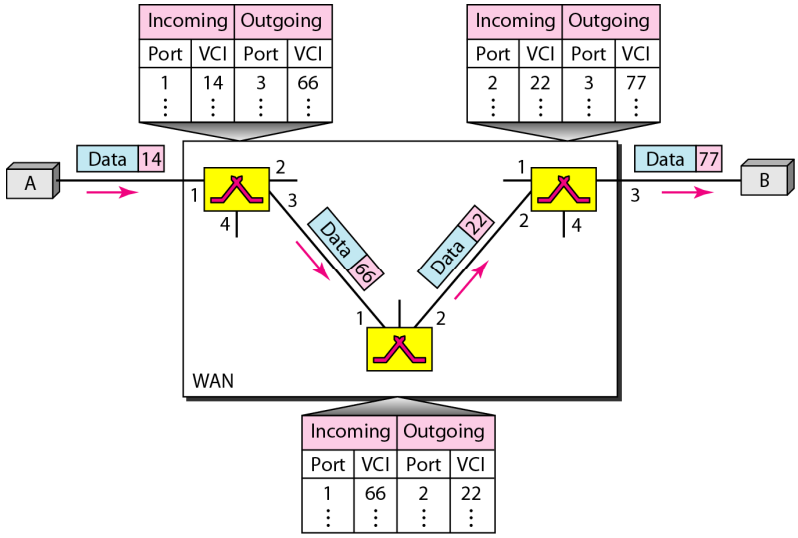

Setup request in a virtual-circuit network

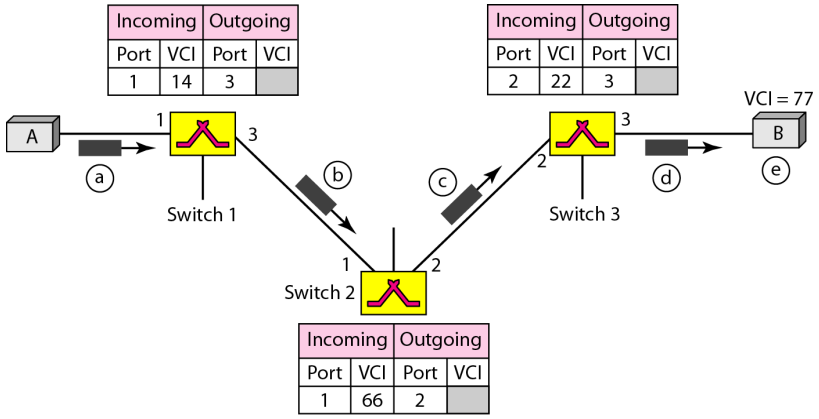

Setup acknowledgment in a virtual-circuit network

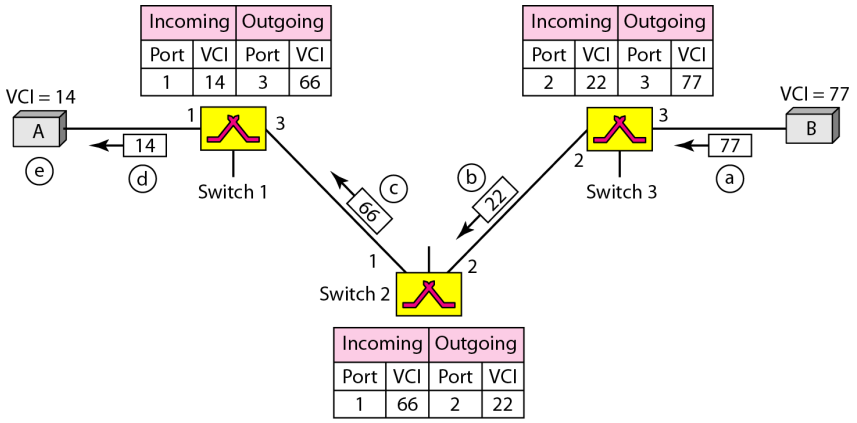

Note

In virtual-circuit switching, all packets belonging to the same source and destination travel the same path; but the packets may arrive at the destination with different delays if resource allocation is on demand.

Delay in a virtual-circuit network

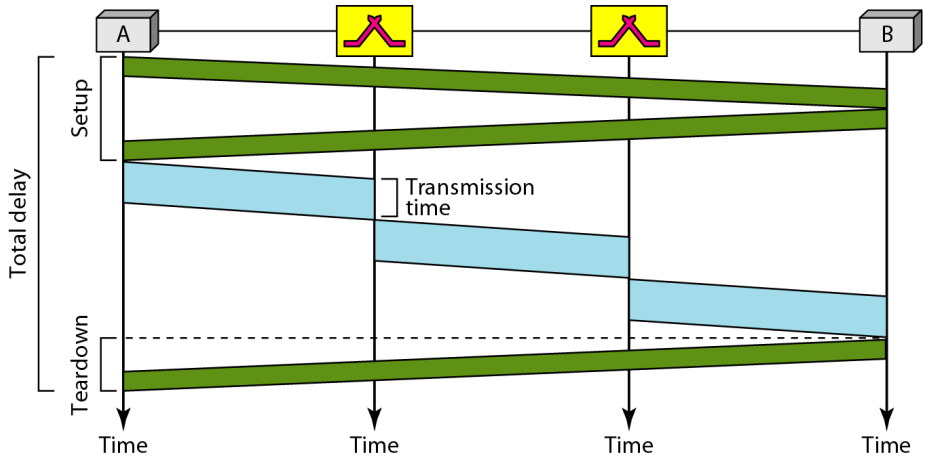

Note

Switching at the data link layer in a switched WAN is normally implemented by using virtual-circuit techniques.

7.4 STRUCTURE OF A SWITCH

We use switches in circuit-switched and packet-switched networks. In this section, we discuss the structures of the switches used in each type of network.

Topics discussed in this section:

Structure of Circuit Switches
Structure of Packet Switches

Time-slot interchange

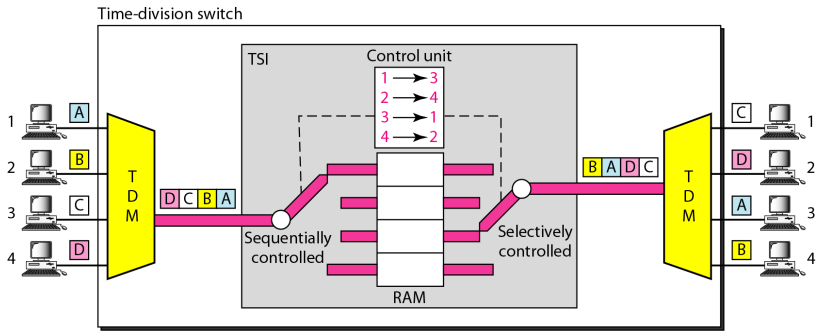

Time-space-time switch

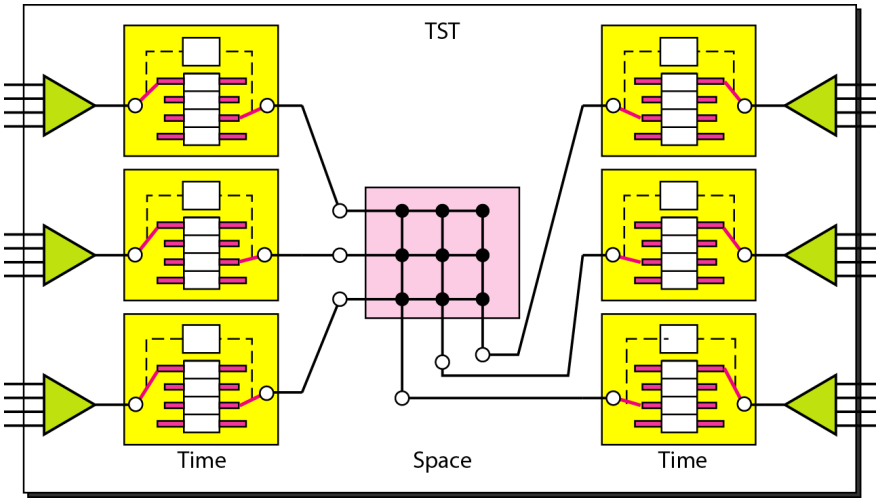

Packet switch components

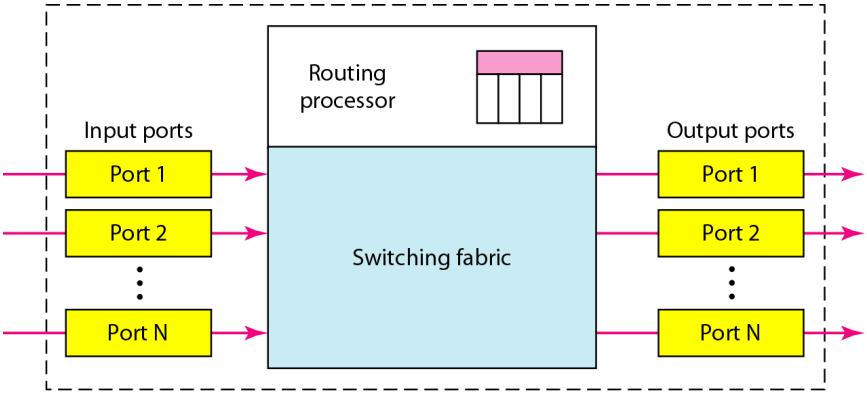

Input port

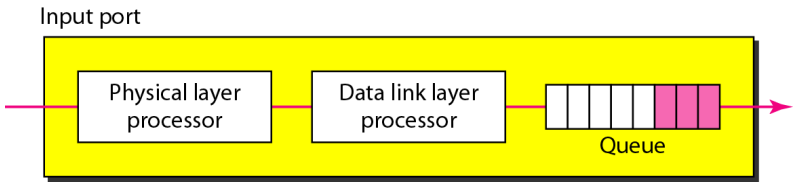

Output port

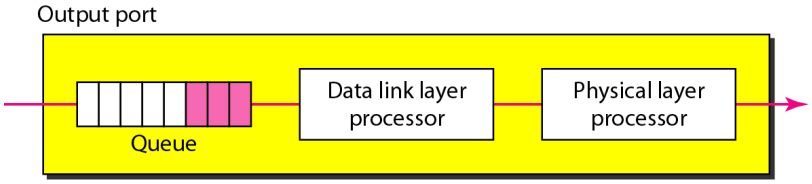

7.5 TELEPHONE NETWORK

Telephone networks use circuit switching. The telephone network had its beginnings in the late 1800s. The entire network, which is referred to as the plain old telephone system (POTS), was originally an analog system using analog signals to transmit voice.

Topics discussed in this section:

Major Components
LATAs
Signaling
Services Provided by Telephone Networks

A telephone system

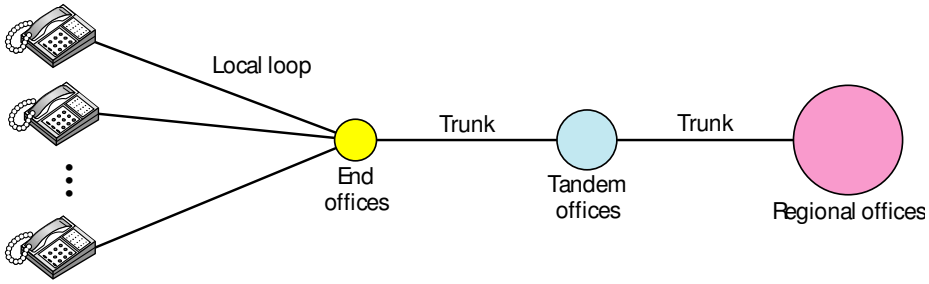

Note

Intra-LATA services are provided by Local Exchange Carriers.
Since 2003, in Cyprus there are two types of LECs: incumbent local exchange carriers and competitive local exchange carriers.

Switching offices

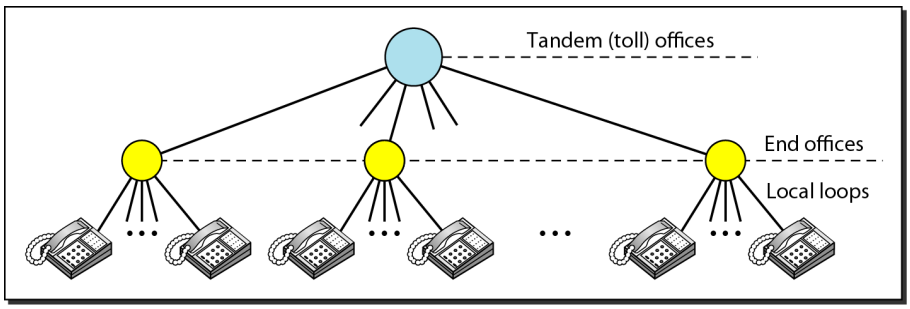

Point of presences (POPs)

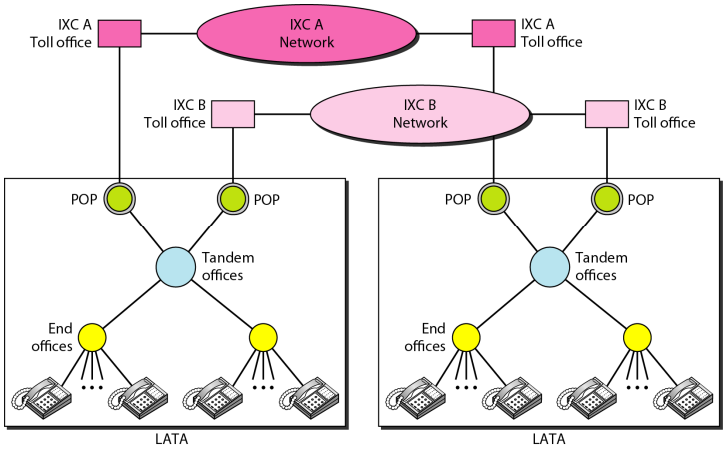

Note

The tasks of data transfer and signaling are separated in modern telephone networks: data transfer is done by one network, signaling by another.

Data transfer and signaling networks

SP: Signal point
STP: Signal transfer point

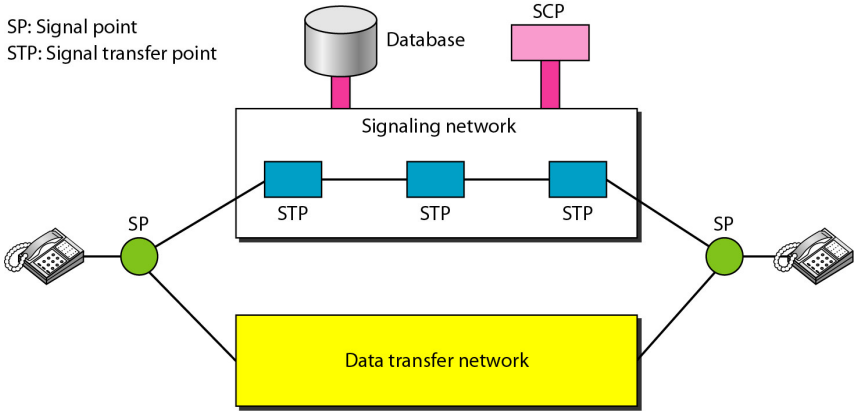

Layers in SS7

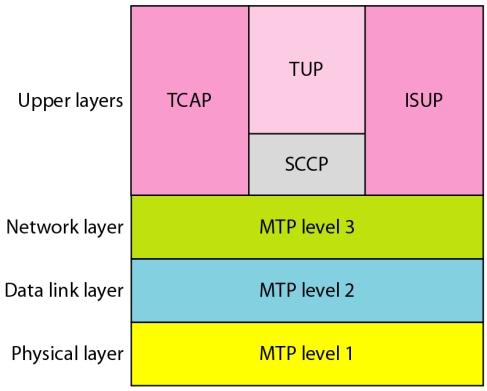

MTP: Message transfer part
SCCP: Signaling connection control point
TCAP: Transaction capabilities application port
TUP: Telephone user port
ISUP: ISDN user port

7.6 DIAL-UP MODEMS

Traditional telephone lines can carry frequencies between 300 and 3300 Hz, giving them a bandwidth of 3000 Hz. All this range is used for transmitting voice, where a great deal of interference and distortion can be accepted without loss of intelligibility.

Topics discussed in this section:

Modem Standards

Telephone line bandwidth

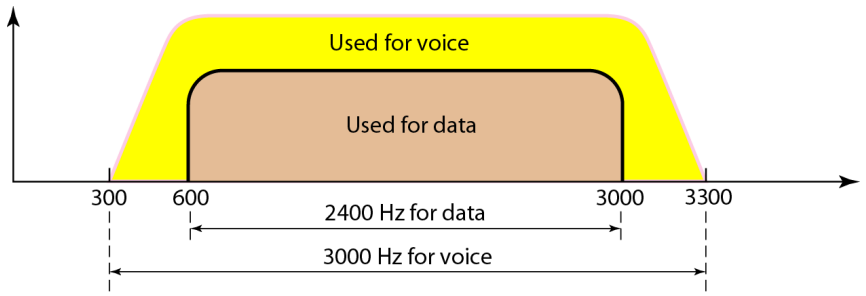

Modulation/demodulation

Note

Modem
stands for modulator/demodulator.

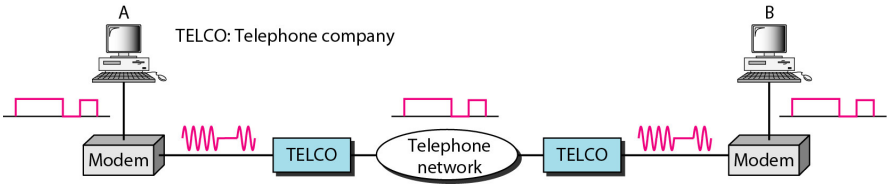

The V.32 and V.32bis constellation and bandwidth

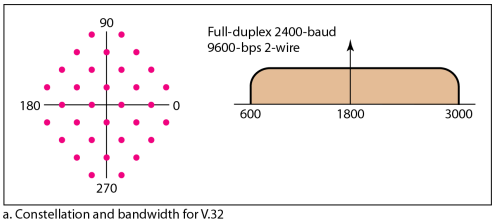

a. Constellation and bandwidth for V.32

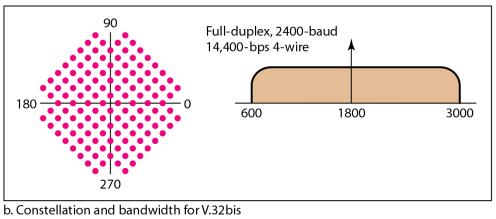

b. Constellation and bandwidth for V.32bis

Uploading and downloading in 56K modems

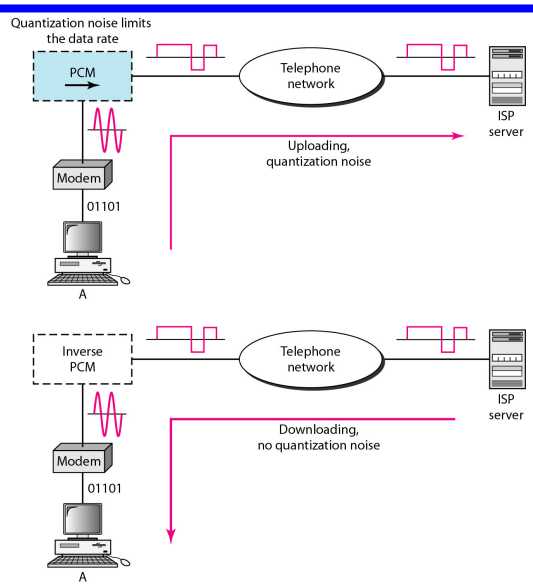

7.7 DIGITAL SUBSCRIBER LINE

After traditional modems reached their peak data rate, telephone companies developed another technology, DSL, to provide higher-speed access to the Internet. Digital subscriber line (DSL) technology is one of the most promising for supporting high-speed digital communication over the existing local loops.

Topics discussed in this section:

ADSL
ADSL Lite
HDSL
SDSL
VDSL

Note

ADSL is an asymmetric communication technology designed for residential users; it is not suitable for businesses who want high upload speeds.

Note

The existing local loops can handle bandwidths up to about 4-5 MHz.

Note

ADSL is an adaptive technology. The system uses a data rate based on the condition of the local loop line.

Discrete multitone technique

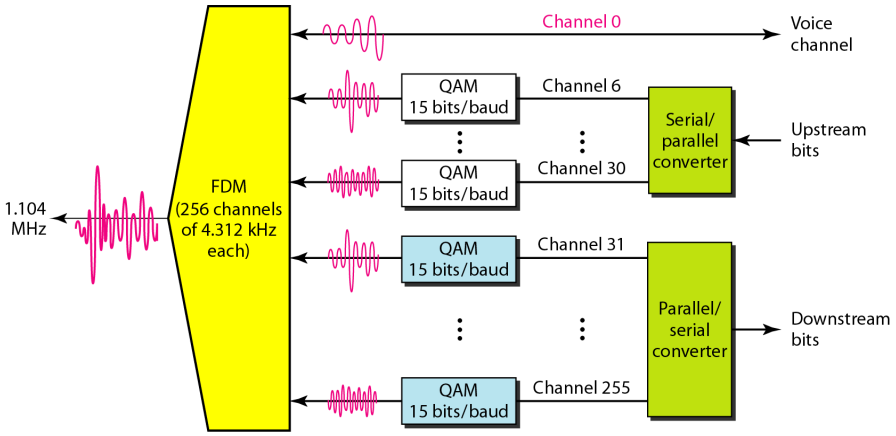

Bandwidth division in ADSL

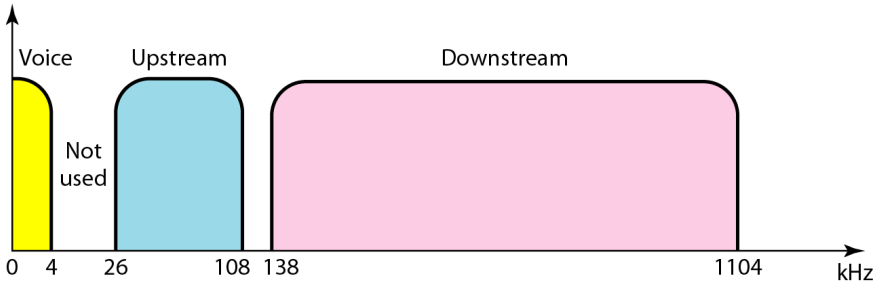

ADSL modem

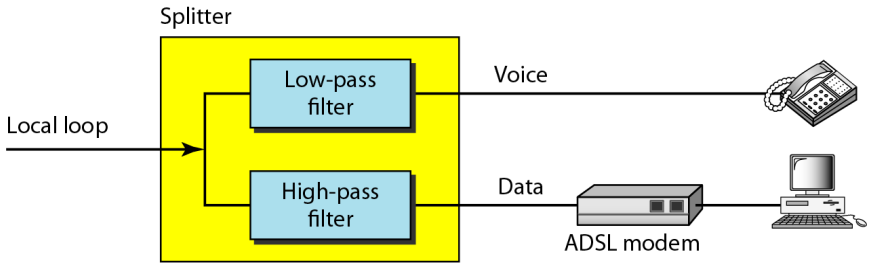

DSLAM

Digital Subscriber Line Access Multiplexer

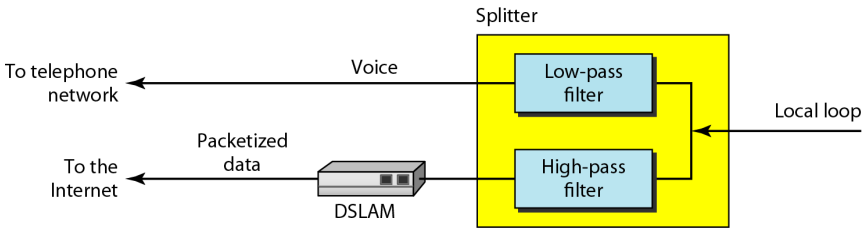

Summary of DSL technologies

Technology	*Downstream Rate*	*Upstream Rate*	*Distance (km)*	*Twisted Pairs*	*Line Code*
ADSL	1.5–6.1 Mbps	16–640 kbps	4	1	DMT
ADSL Lite	1.5 Mbps	500 kbps	6	1	DMT
HDSL	1.5–2.0 Mbps	1.5–2.0 Mbps	4	2	2B1Q
SDSL	768 kbps	768 kbps	4	1	2B1Q
VDSL	25–55 Mbps	3.2 Mbps	1-2.5	1	DMT

7.8 SUMMARY (part 7)

- Switching is a method in which communication devices are connected to one another efficiently.
- A switch is intermediary hardware or software that links devices together temporarily.
- There are three fundamental switching methods: circuit switching, packet switching, and message switching.
- In circuit switching, a direct physical connection between two devices is created by space-division switches, time-division switches, or both.
- In a space-division switch, the path from one device to another is spatially separate from other paths.
- A crossbar is the most common space-division switch. It connects n inputs to m outputs via n × m crosspoints.
- Multistage switches can reduce the number of crosspoints needed, but blocking may result.
- Blocking occurs when not every input has its own unique path to every output.
- In a time-division switch, the inputs are divided in time, using TDM. A control unit sends the input to the correct output device.
- The time-slot interchange and the TDM bus are two types of time-division switches.
- Space- and time-division switches may be combined.
- A telephone network is an example of a circuit-switched network.
- A telephone system has three major components: local loops, trunks, and switching offices.
- Telephone companies provide digital services such as switched/56 services and digital data services.
- A home computer can access the Internet through the existing telephone system or through a cable TV system.
- DSL supports high-speed digital communications over the existing telephone local loops.
- ADSL technology allows customers a bit rate of up to 1 Mbps in the upstream direction and up to 8 Mbps in the downstream direction.
- ADSL uses a modulation technique called DMT which combines QAM and FDM.

References

- B.A. Forouzan, **Data Communications and Networking**, 4th edition, McGraw-Hill, 2007
- W. Stalling, **Local and Metropolitan Area Networks**, 6th edition, Prentice Hall, 2000
- W. Stallings, **Data and Computer Communications**, 7th edition, Prentice Hall, 2004
- F. Halsall, **Data Communications, Computer Networks and Open Systems**, 4th edition, Addison Wesley, 1995